Pharmaceutical tableting

By Dr. Karim Maarif

COMPRESSION

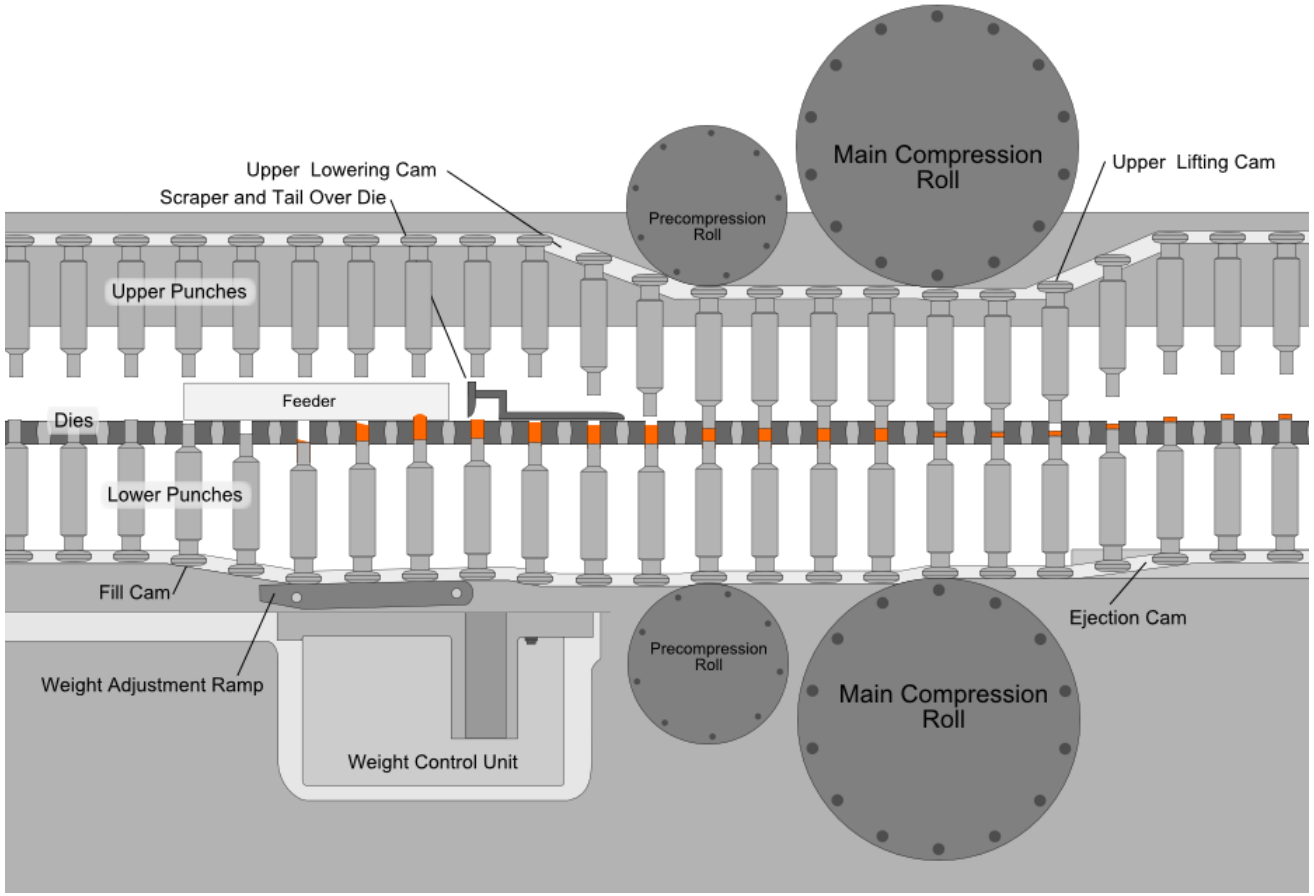
Upper Lowering Cam
Scraper and Tail Over Die
Precompression Roll
Main Compression Roll
Upper Lifting Cam
Upper Punches
Feeder
Dies
Lower Punches
Fill Cam
Weight Adjustment Ramp
Weight Control Unit
Precompression Roll
Main Compression Roll
Ejection Cam

Introduction

- Tablets are the most important pharmaceutical dosage from,
- Compression is defined as *the reduction in the bulk volume* of a material.
- 4 mechanisms are basically involved in the process of compression of particles:
  - ✓ Deformation,
  - ✓ Densification,
  - ✓ Fragmentation,
  - ✓ Attrition
- In order to compress a powder or granulation product into a tablet of specific hardness, *a defined compression force must be applied*.
- By compressing a constant mass of powder, any variation in the applied force causes a change in tablet mechanical strength.

Introduction

- If the powder has good compressibility, then the force needed for compression would be low.
- This compressibility will depend on powder characteristics (Specfic surface area, cristalinity, density etc… and thermodynamic behavior).
- As tablet formulation is a multicomponent system, its ability to form a good compact is dictated by the compressibility and compactibility characteristics of each component:
  - **Compressibility** is the ability of a powder to decrease in volume under pressure.
  - **Compactibility** is the ability of the powder to be compressed into a tablet of specific tensile strength.
- Two stages involved in the compaction:
  - **Initial compression:** to push the particles closer together and
  - **Deformation:** where closely packed particles no longer reduce the packing volume by simple movement around each other **but deform** either by *brittle fracture* or *by plastic flow or both*

Intermolecular bonding forces

- The processes of brittle facture and plastic flow increase the surface contact and bond formation

- The Types of Bonding That can be responsible for tablet Formation:

1) Solid bridges: are formed between two particles by processes such as crystallization of amorphous portions of solid, or chemical reactions (such as salt formation between adjacent particles).

2) Moveable liquids: compaction is assisted by the presence of some moisture.

3) Non–freely moveable binders: include the binders used in wet granulation processing (PVP), which make powders into better compact.

4) Attraction between solid particles: By long-range attractive forces :
   - **Electrostatic:** during mixing and other dry processing events
   - **Van der Waal and hydrogen bonding:** major contribution during tabletting.

1) Mechanical interlocking

Punches

Punches

- Internationally there are two recognized standards for tablet compression tooling, the TSM and the EU standards.
- Both TSM and EU standards identify the physical tool configuration for B and D type compression tools, their critical dimensions and associated tolerances assuring tablet quality and smooth press operation

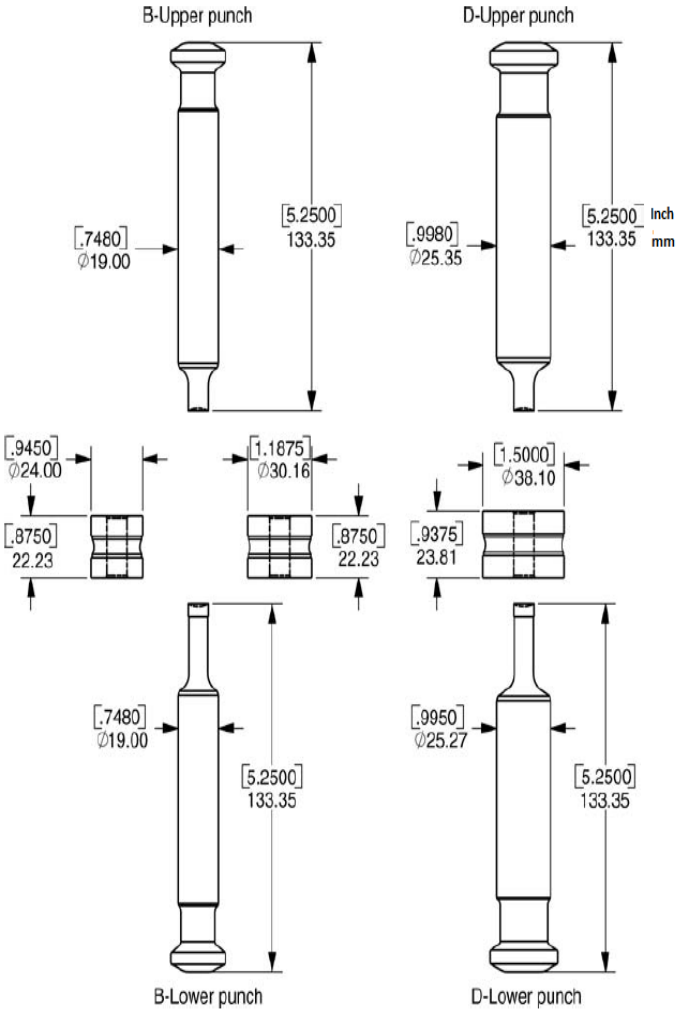

Drawing showing the differences between the B and D TSM and EU configurations.

*TSM "*Tablet Specification Manual*" tooling standard is recognized in the Americas and is considered exclusive in the United States.

Punches

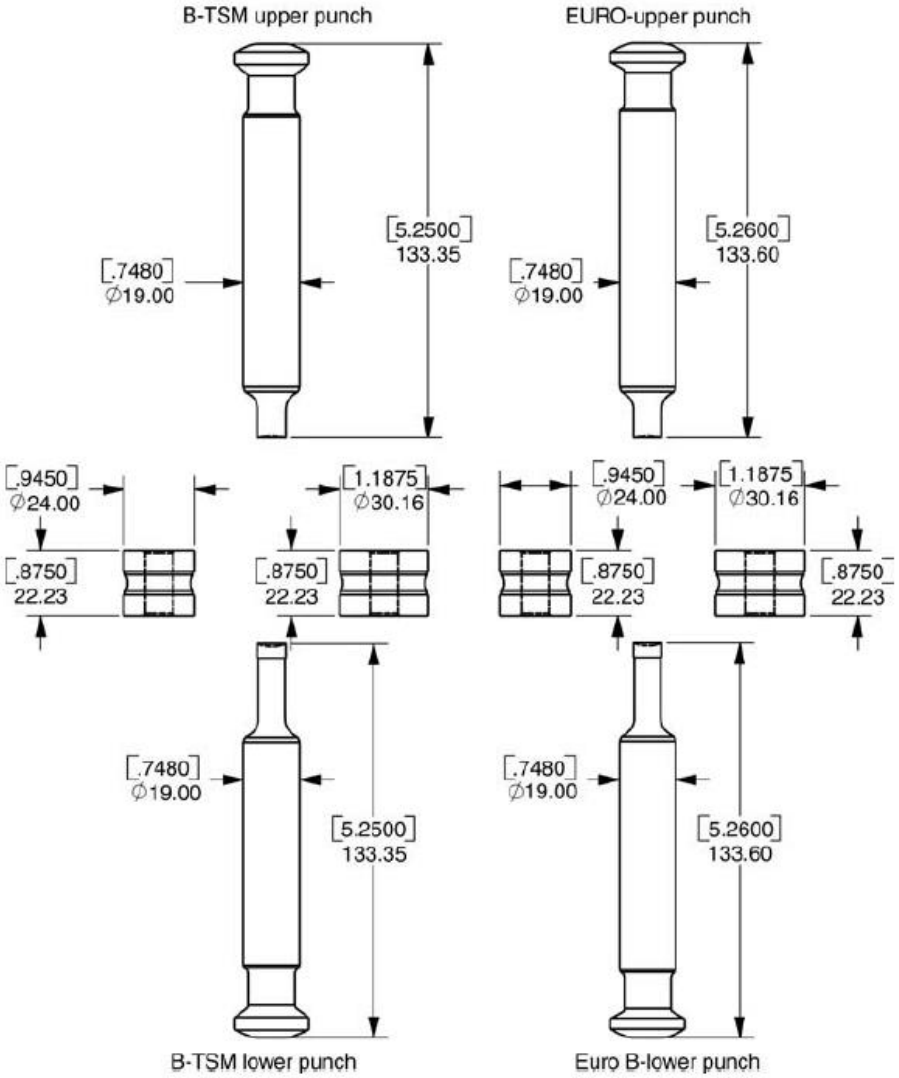

Drawing showing the differences between the B TSM and EU configurations.

Punches

The impact of the pressure roller and head radius at high-speeds and heavy forces can cause a work-hardening effect, contributing to the pitting of the head flat.

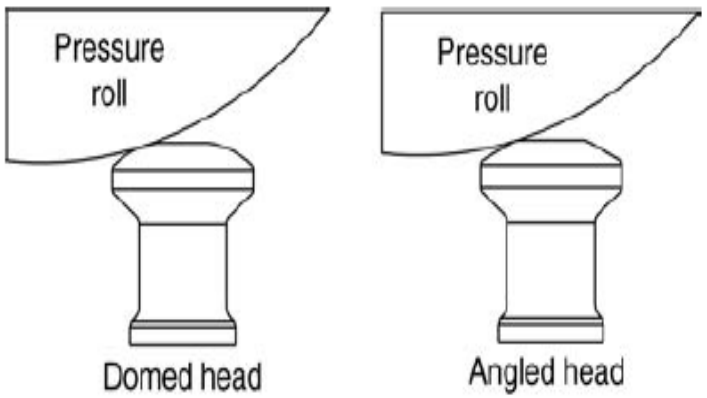

Differences between TSM and TSM Domed.

The domed head configuration provides:

1) A smoother transition into the compression cycle of the tablet press,

2) Reducing stress,

1) Reducing premature wear of the pressure rollers

Punches

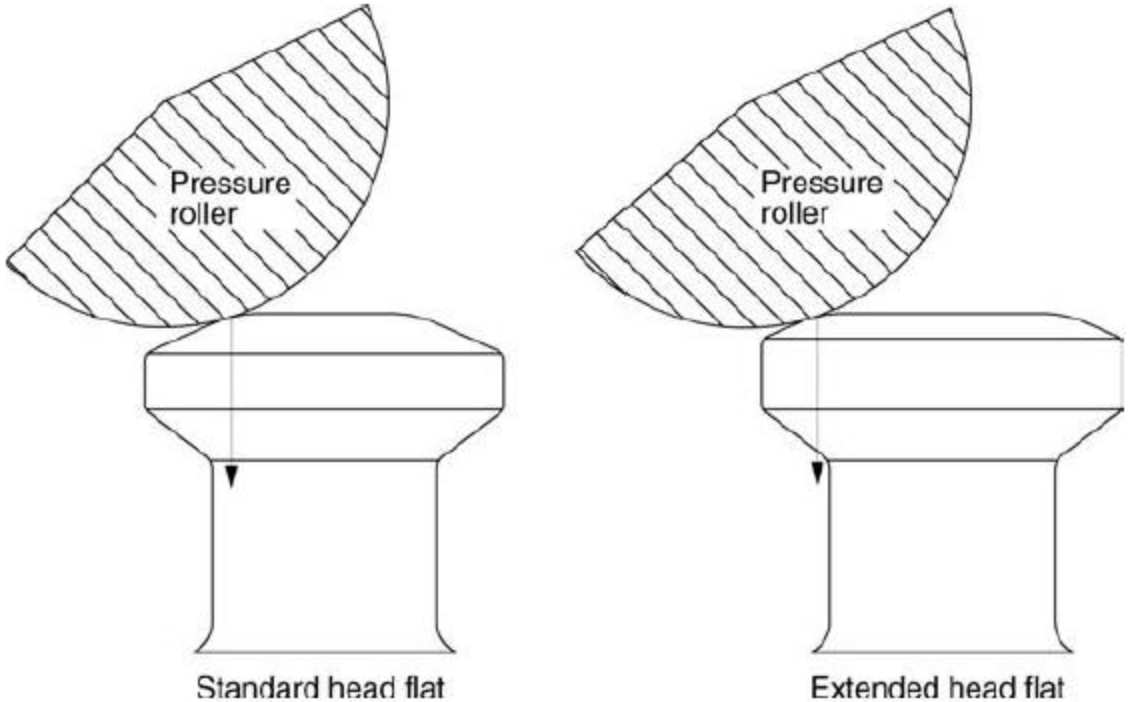

Drawing extended head flat and downward pressure on the head.

* Advantage: To increase the tablet press output.
* Disadvantage: risk of head fracturing (outside of the neck diameter)

Punches

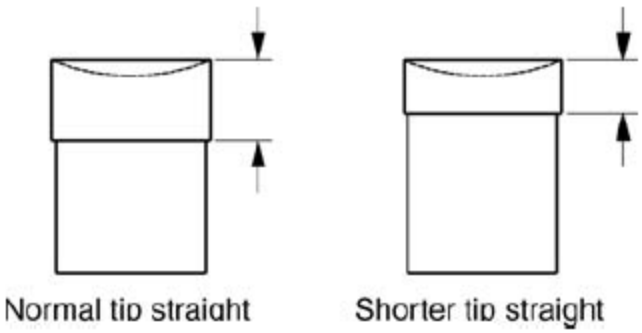

Drawing short tip straight.

- The lower punch tip creates a tremendous amount of friction as it travels the full length of the die through the various stages of tablet compression.

- When compressing sticky products or products with a low melting point, the friction created by the lower punch tip can cause lower punch binding.

- Reducing the bearing surface of the lower punch tip will reduce friction allowing the punch to travel easier in the die and reduce operating temperatures

Punches

✓ Product wedged between the punch tip and die wall may cause excessive heat and thermal expansion of the punch tip. This could result in:

* Punch binding and/or seizure,
* Premature head wear,
* Tablet discoloration or burning
* Dark particles contaminating the tablet.

✓ A **" bakelite relief"** assures a sharp edge to assist with removing product adhered to the die wall allowing the punch tip to move freely in the die

✓ A **"double deep relief"** increases the depth of the lower punch relief and provides the same results as the bakelite relief;

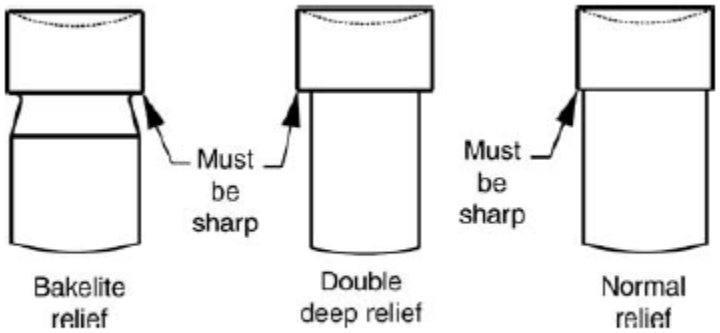

Drawing of bakelite relief and double deep relief

Tablet forms

Undesirable Shapes:

to be avoided in order to provide maximum tablet output and satisfactory tool life

*A tablet shape too close to round may cause a condition known as punch-to-die binding or self-locking.

* The corner radius less than 0.032 inch can cause excessive stress and failure of tablet compression

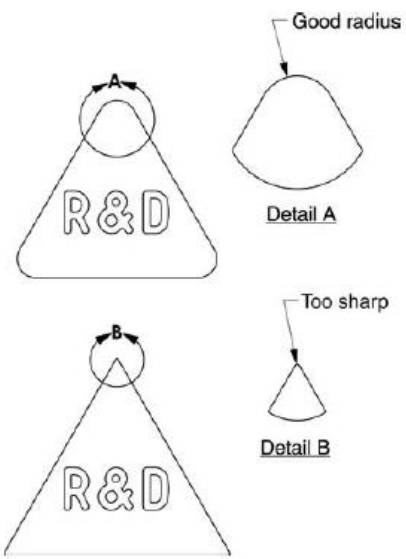

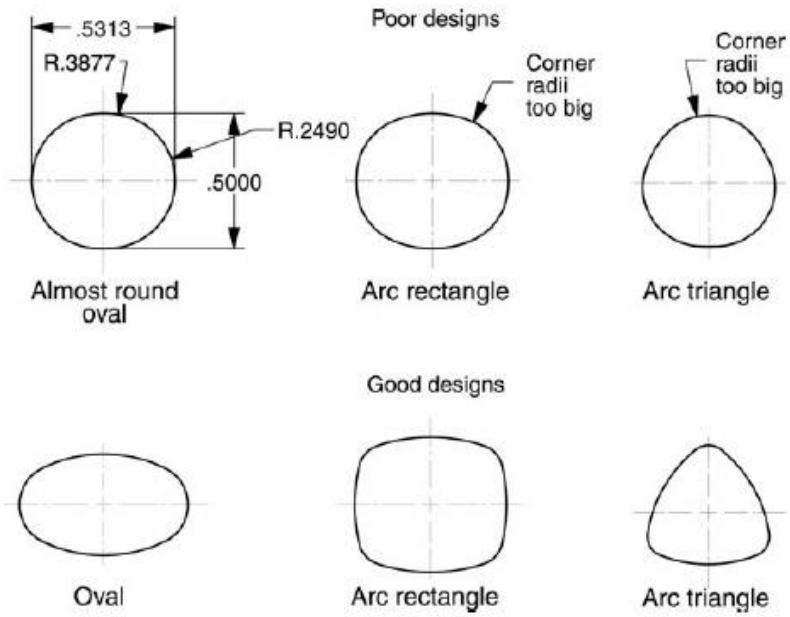

Tablet forms

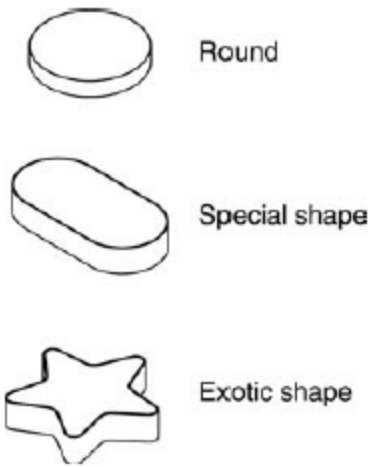

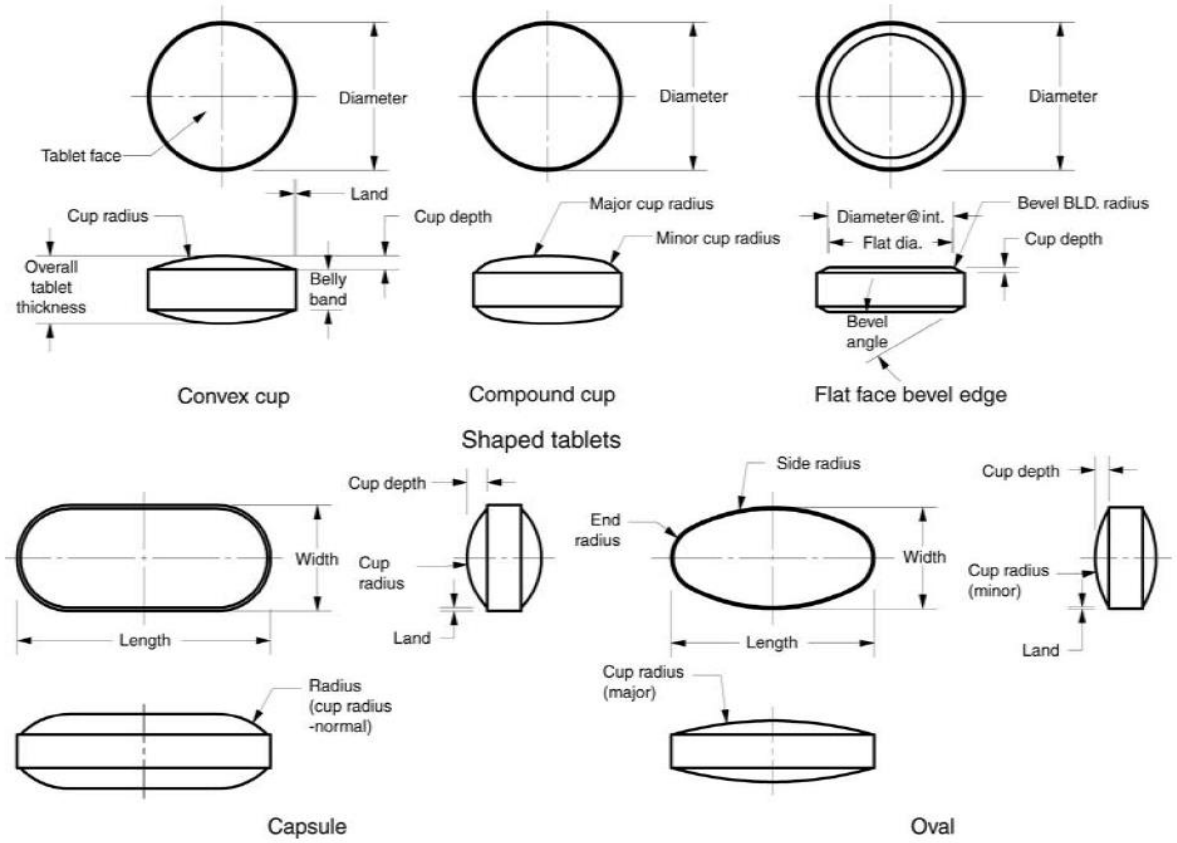

Tablet forms

Term	Definition
Major axis	The largest dimension of a shaped tablet
Minor axis	The smallest dimension of a shaped tablet
End radius	The radius on either end of a capsule or oval-shaped tablet
Side-radius	The radius on either side of an oval or modified shaped tablet
Band	The center section of a tablet between the cup profiles: it is governed by a direct relationship of the die cavity profile.
Compound cup	A cup profile which consist of two or more radii
Embossed	The raised identification on a tablet or a punch face; an embossed punch tip results in a debossed tablet.
Debossed	The depressed identification on a tablet or a punch face: a dehossed punch tip results in a embossed tablet

Punches

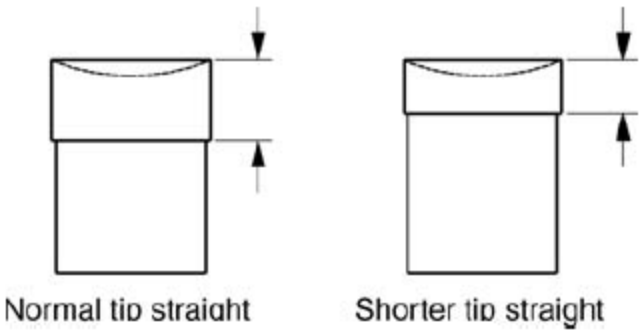

Drawing short tip straight.

- The lower punch tip creates a tremendous amount of friction as it travels the full length of the die through the various stages of tablet compression.

- When compressing sticky products or products with a low melting point, the friction created by the lower punch tip can cause lower punch binding.

- Reducing the bearing surface of the lower punch tip will reduce friction allowing the punch to travel easier in the die and reduce operating temperatures

Tabletting cycle

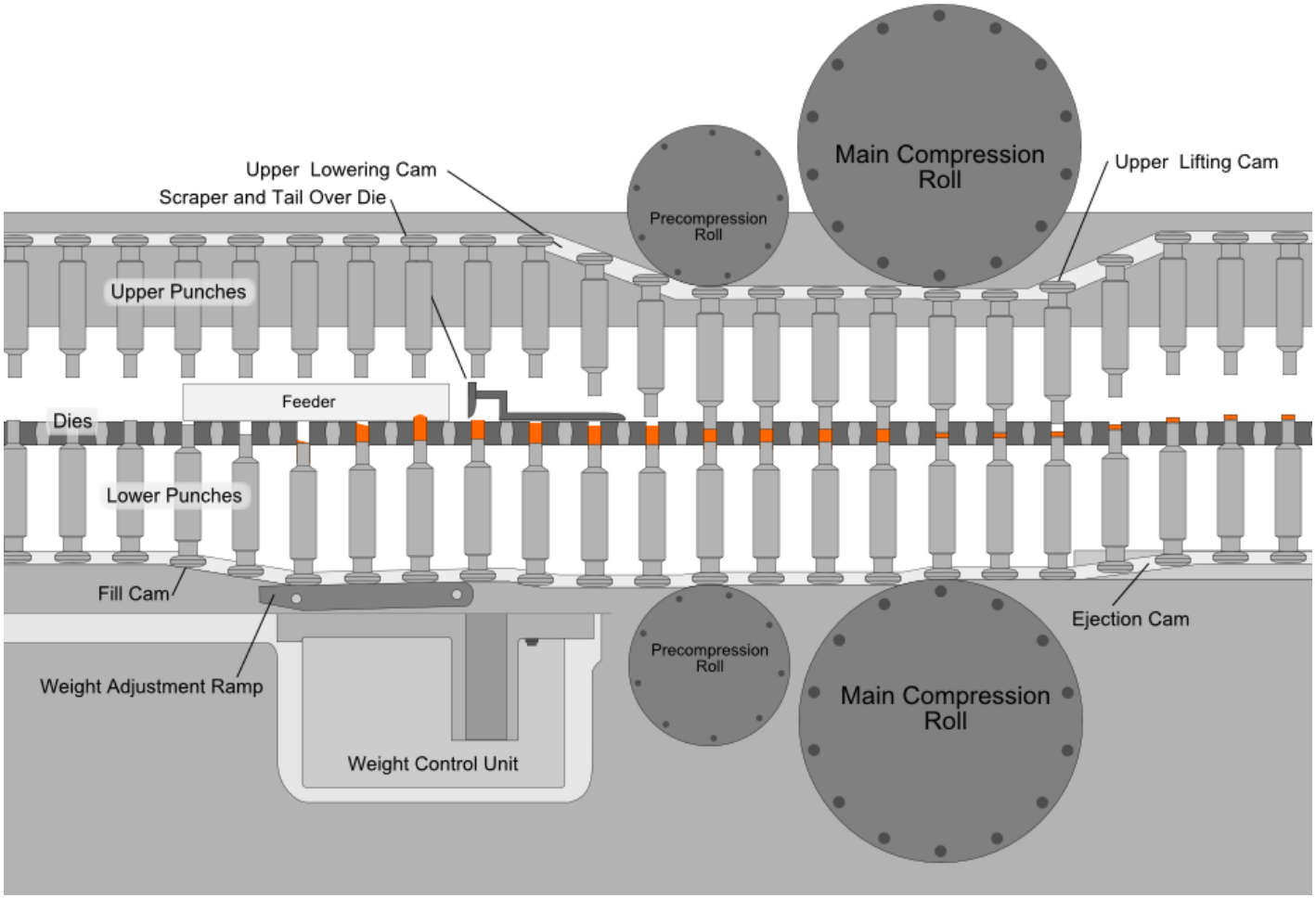

- Filling
- Compression
- Ejection

Tabletting cycle

Filling

- Is a volumetric process
- The filling **depth** is determined by the height of the die cavity
- The filling **volume** is determined by the **diameter of the die** hole and the **filling depth**

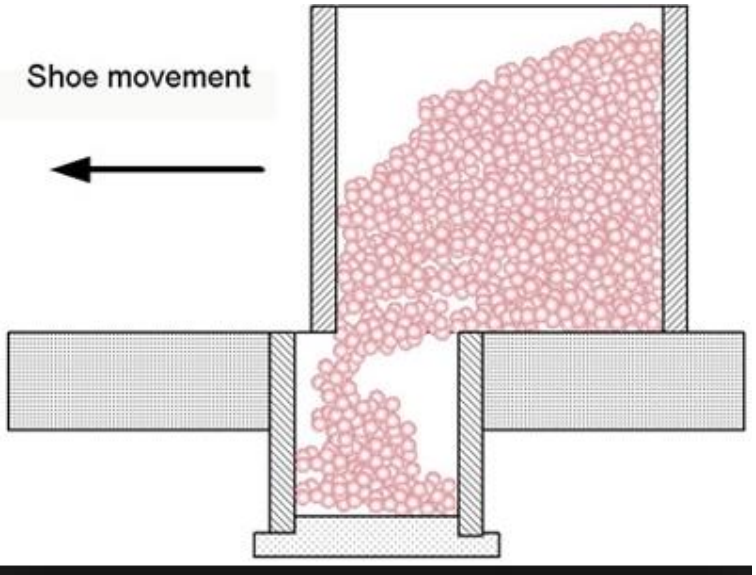

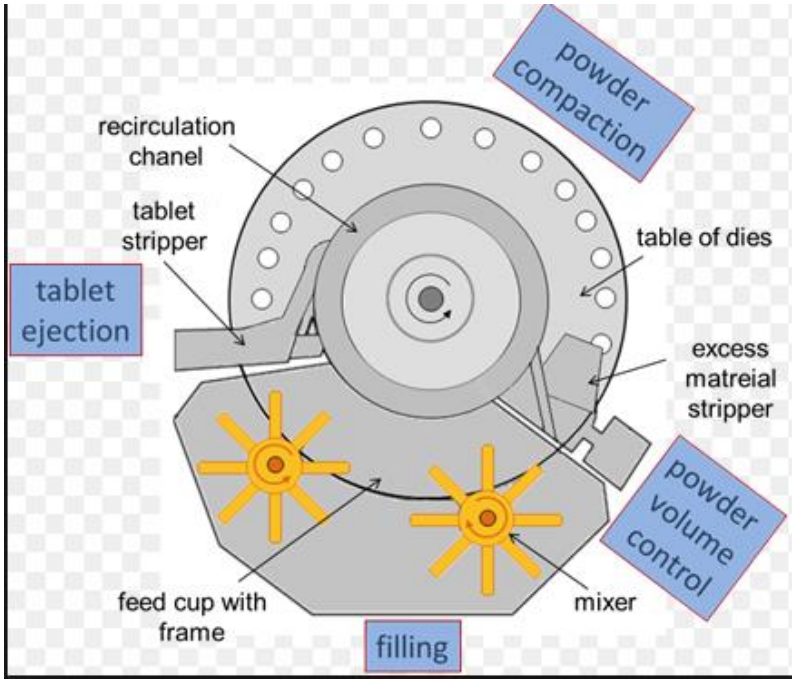

Tabletting cycle

Compression

- Is the central stage of tablet production
- Compression not only depends on the machine but mainly on the material properties of a tablet formulation.
- The elastic recovery or relaxation of the tablet starts when one punch leaves the tablet and continue after ejection

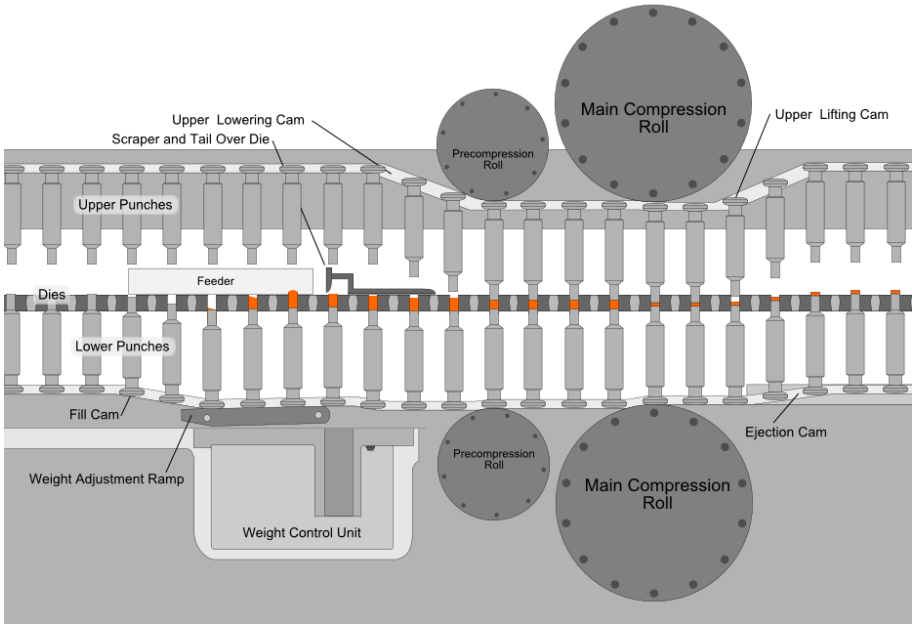

Tabletting cycle

Ejection

- Usually the lower punch moves upward to eject the tablet from the die
- The upper punch has already left the die when the process of ejection starts.

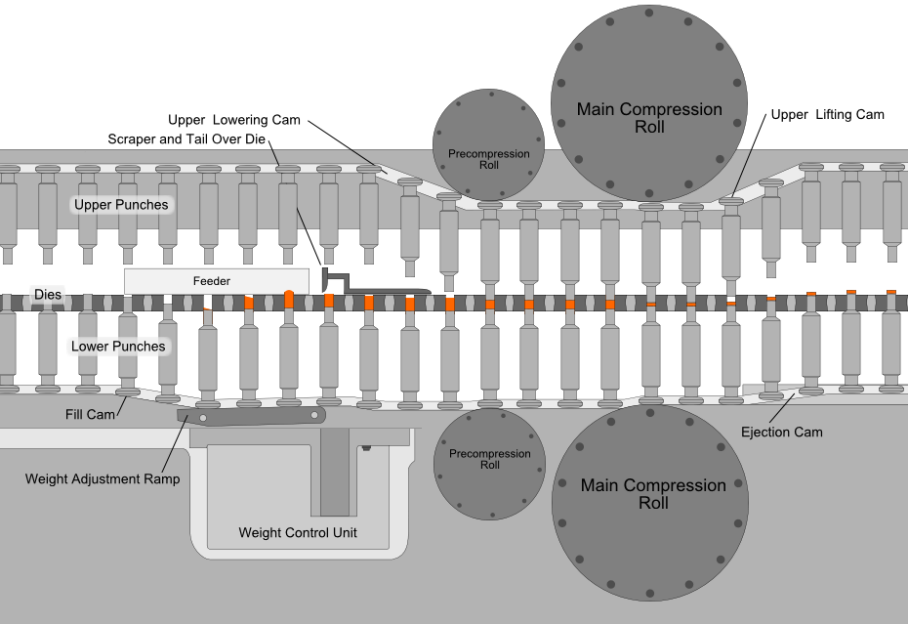

TABLETING MACHINES

TABLETING MACHINES

Single - Punch Tableting Machines

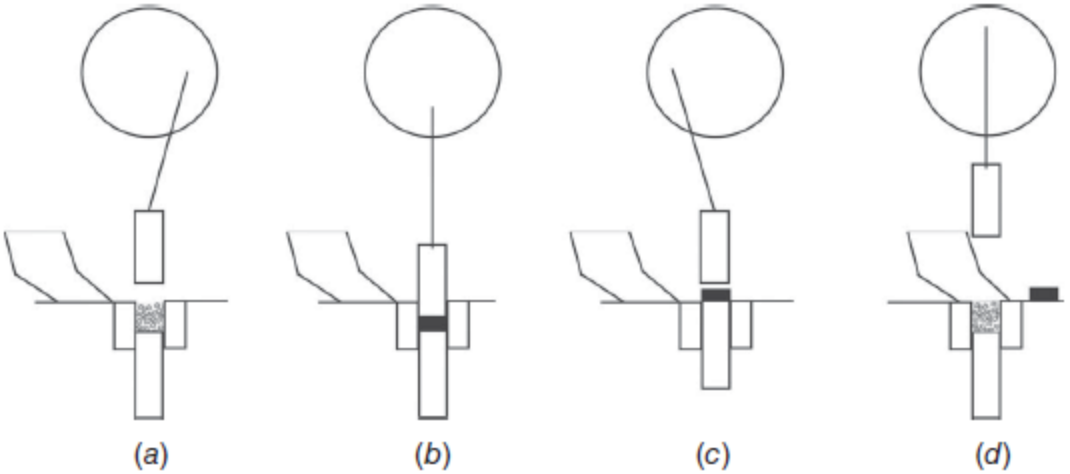

Operation of eccentric tableting machine: (*a*) filling; (*b*) compression; (*c*) ejec tion; (*d*) pushing from die table.

TABLETING MACHINES

Rotary Tableting Machines

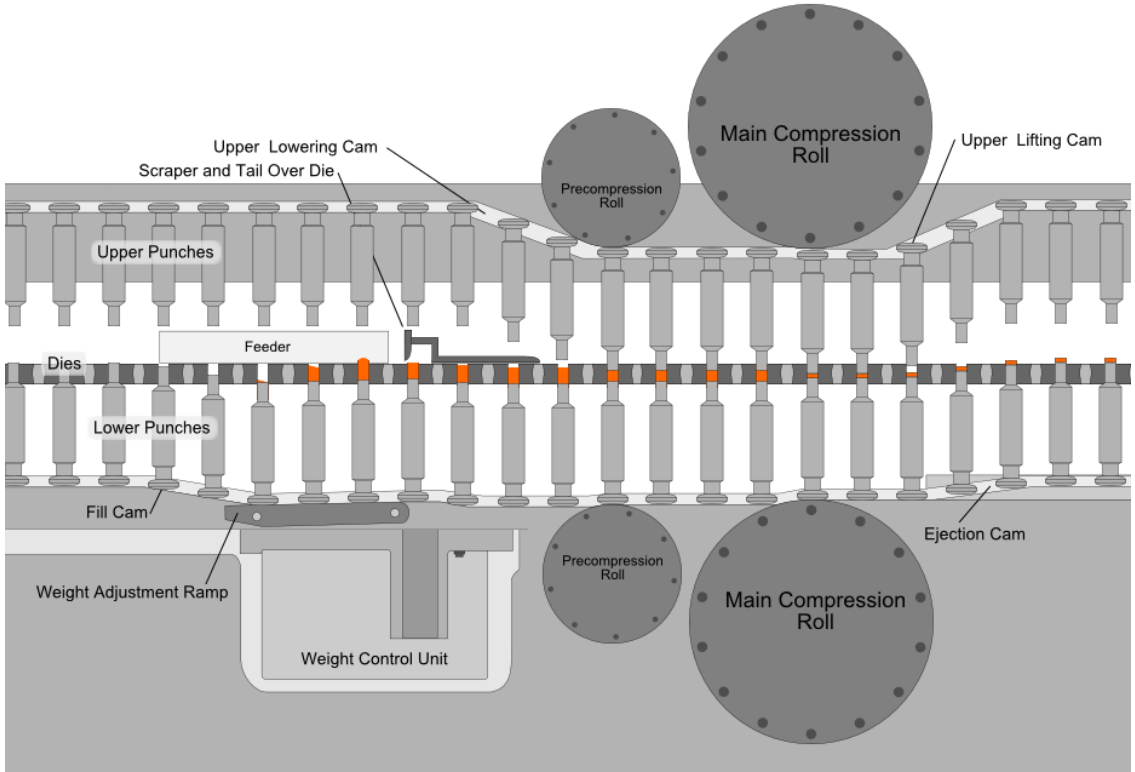

Application of Tableting Machines

- In summary, the single - punch tableting machines still being used are mostly for research, whereas rotary machines are predominantly used for production;

- For rotary machines in most cases it is not machine speed that determines the production rate but material flow and compression properties.

IMPROTANT FACTORS DURING MANUFACTURING PROCESS

IMPROTANT FACTORS DURING MANUFACTURING PROCESS

Optimization of Die Filling:

- Two problems arise generally:

  1- Either the product demixes and tablet weight and content uniformity are no longer controlled
  2- or the die is not completely filled and thus tablet weight also varies.

- At low machine speeds the die is usually completely filled; at high machine speeds this becomes more difficult. Thus special filling devices using one or more paddles have been developed to improve filling.

Example paddle feeder. (Courtesy of Kilian.)

IMPROTANT FACTORS DURING MANUFACTURING PROCESS

Tablet Weight Control:

To control tablet weight different possibilities exist.

- To weight (IPC) a number of tablets manually and to adjust machine settings according to the results when necessary
- For high - speed rotary machines automatically working weighing systems have been developed to be controlled by control of compression force.

IMPROTANT FACTORS DURING MANUFACTURING PROCESS

Control of Mixing Homogeneity:

- The systems to control weight uniformity are not able to control uniformity of the mixture
- When during fi lling of the die the tableted material demixes, tablet weight usually tends to vary. However, these variations can be small and not easy to detect

- To monitor mixing uniformity in the final tablet: (Spectroscopic techniques)

  1- Raman spectroscopy

  2- Near - Infrared (NIR) spectroscopy

  3- Special online sensors have been build into the machine and they measure the spectrum for each tablet.

IMPROTANT FACTORS DURING MANUFACTURING PROCESS

Lubrication:

- Adhesion forces between the material and punches and dies result in sticking of the tablets at the punches and dies.

- Adhesion forces are further influenced by RH
- à
- If adhesion forces at the punches and dies >>>> the cohesion forces between the particles inside the tablet → tablets stick at the punches and can cap

- To overcome this problem, lubrication (internal and external) is the method of choice:

1-Internal: by mixing the tableted product shortly before the tableting process with a solid lubricant, thus lowers bonding (*for plastically deforming materials*).

2- External: punches and dies can be manually lubricated with a fluid

IMPROTANT FACTORS DURING MANUFACTURING PROCESS

Cleaning :

- To ensure product quality, cleaning is of utmost importance
- It involves:

1- The addition of spray systems, tank cleaners, nozzles, and seals into the tableting machine in order to automate the cleaning process.

- **2-** The wash -off - line procedure : by cleaning the exchangeable compression modules after it is removed from the tablet press.

PROBLEMS DURING TABLET MANUFACTURING

Punches and dies terminology

Term	Definition
Tooling set	A complete set of punches and dies to accommodate all stations in a tablet press
Tooling station	The upper punch, lower punch, and die which accommodate one station in a tablet press
Head	The largest diameter of a common punch which contacts the machines cams and accepts the pressure from the pressure rollers
Head flat	The flat portion of the head which makes contact with the pressure rollers and determines the maximum dwell time for compression
Top head angle	Angle from the outside head diameter to the top head radius; it allows for sufficient head thickness and smoother camming
Top head radius	The radius on the top of the head which blends the top head angle to the head flat. Some head configurations may consist of only the head radius without the head angle. This radius makes the initial contact with the pressure roll and allows a smoother transition into the compression cycle
Head back angle	Sometimes referred to as the inside head angle, located underneath the top head angle or the top head radius which contacts the machine camming for vertical movement of the punch within the punch guides
Neck	Located below the head and provides clearance as the punch cycles through the machine cams
Barrel or shank	The vertical bearing surface of a punch which makes contact with the punch guides in the machine turret for verticle guidance
Barrel chamfer	Chamfers at the ends of the punch barrel, eliminate outside corners
Barrel-to-stem radius	The radius that blends the punch barrel to the stem
Stem	The area from the barrel to the edge of the punch tip
Tip length	The straight portion of the punch stem
Tip straight	The section of the tip that extends from the tip relief to the end of the punch tip; it maintains the punch tip size tolerance
Land	The area between the edge of the punch cup and the outside diameter of the punch tip; this adds strength to the tip to reduce punch tip fracturing
Tip face or cup	The portion of the punch tip that determines the contour of the tablet face; it includes the tablet embossing
Cup depth	The depth of the cup from the highest point of the tip edge to the lowest point of the cavity
Tip relief	The portion of the punch stem which is a undercut or made smaller than the punch tip straight; most common for lower punches to aid in reducing friction from the punch tip and die wall as the punch travels through the compression cycle; the area where the punch tip and relief meet must be sharp to scrape product from the die wall as the lower punch travels down for the fill cycle
Key	A projection normally of mild steel which protrudes above the surface of the punch barrel. It maintains alignment of the upper punch for reentry into the die; mandatory on upper punches with multiple tips and all tablet shapes other than round; commonly used with embossed round tablet shapes when rotation of the punch causes a condition known as double impression

Punches and dies terminology

Term	Definition
Key position	The radial and height position of a key on the punch barrel; not found in all presses
Punch overall length	The total length of a punch, other than flat-face tablet configurations, that is normally a reference dimension which consist of a combination of the working length and the cup depth dimensions
Working length	The dimension from the head flat to the lowest measurable point of the tip face, responsible for the consistency of the tablet overall thickness
Anneal	A heat-treating process used on fragile punch tips to decrease the hardness of the punch cups reducing punch tip fracturing
Bakelite tip relief	An undercut groove between the lower punch tip straight and the relief; it assures a sharp corner to assist in scraping product adhering to the die wall: normally a purchased option for lower punches
Barrel Flutes	Verticle slots machined into the punch barrel to reduce the bearing surface and assist in removing product in the punch guides: a purchased option for upper and lower punches
Die	A component used in conjunction with the upper and lower punches; it accepts the product for compaction and is responsible for the tablet's perimeter size and configuration
Die height or overall length	The entire height or overall length of a die
Die outside diameter	The largest diameter of a die, commonly referred to as the die O.D.
Die bore	The cavity of a die that accepts the product for compaction and determines the tablets size and shape configuration
Die groove	The radial groove around the die O.D. which accepts the die lock to secure the die in position in the die table
Die lock	The mechanism used to lock a die in position after it is installed in the die table
Die chamfer	The angled area between the top of the die and the die bore; it assists in guiding. the upper punch into the die bore
Die taper	A gradual increase in dimension, starting from a given depth in the die bore and increasing to the die chamfer; used normally to release air from the die cavity during the compression cycle